CPLXR SERIES DIMENSIONS

Economy Spur Planetary Gearbox

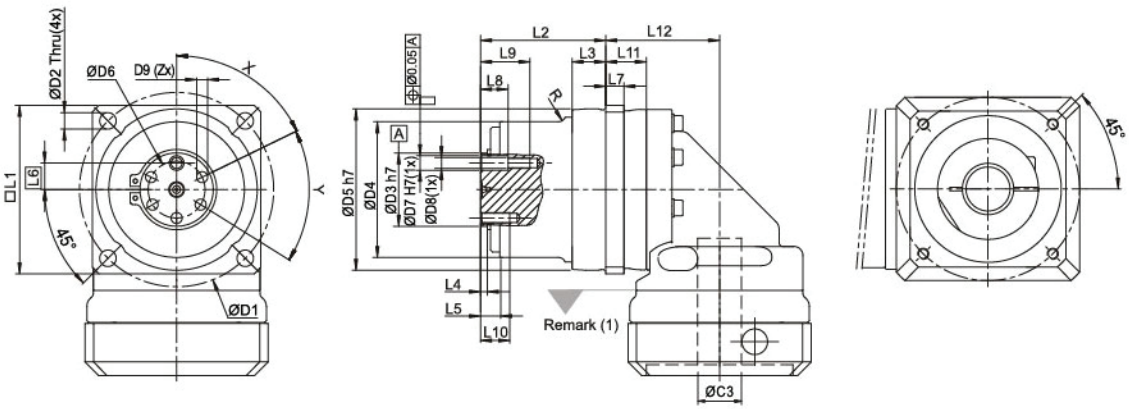

DIMENSION	CPLXR 070		CPLXR 090		CPLXR 120	
	1-STAGE	2-STAGE	1-STAGE	2-STAGE	1-STAGE	2-STAGE
D1	82		106		144	
D2	6.6		9		13	
D3 (h7)	25		40		50	
D4 (h7)	58		74		100	
D5	68		88		118	
D6	18		31		37	
D7 (H7)	6		8		8	
D8	M5x0.8P		M6x1P		M6x1P	
D9	M5x0.8P		M6x1P		M8x1.25P	
R	-		4		2	
L1	70		92		122	
L2	60.2		68.3		82.2	
L3	12.7		18.3		15.7	
L4	3.8		3.7		4.5	
L5	10		10.5		12.5	
L6	8.8		14.5		18.5	
L7	8		10		12	
L8	10		15		16	
L9	18.5		27		28	
L10	12		16		16	
L11	16.8	36.8	22.2	48.9	34.8	71.1
L12	46.3	66.3	62.2	88.9	85.8	122.1
X in Degree	64˚		45˚		45˚	
Y in Degree	58˚		45˚		45˚	
Z	5		7		7	
(1) Dimensions are related to motor interfaces. Please contact Candy Controls for more details.						